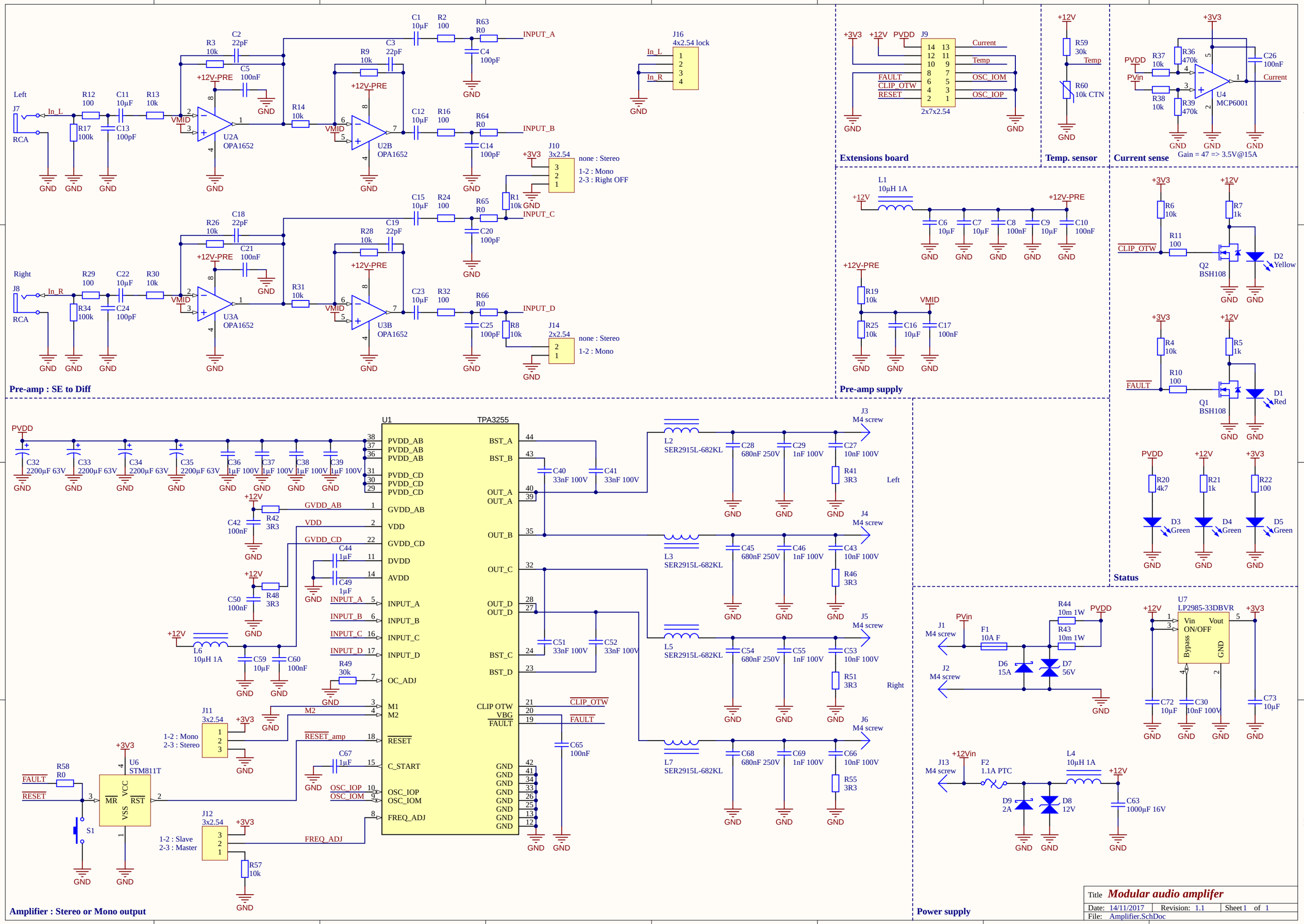

Title *Modular audio amplifer*

Date: 14/11/2017 | Revision: 1.1 | Sheet 1 of 1

File: Amplifier.SchDoc

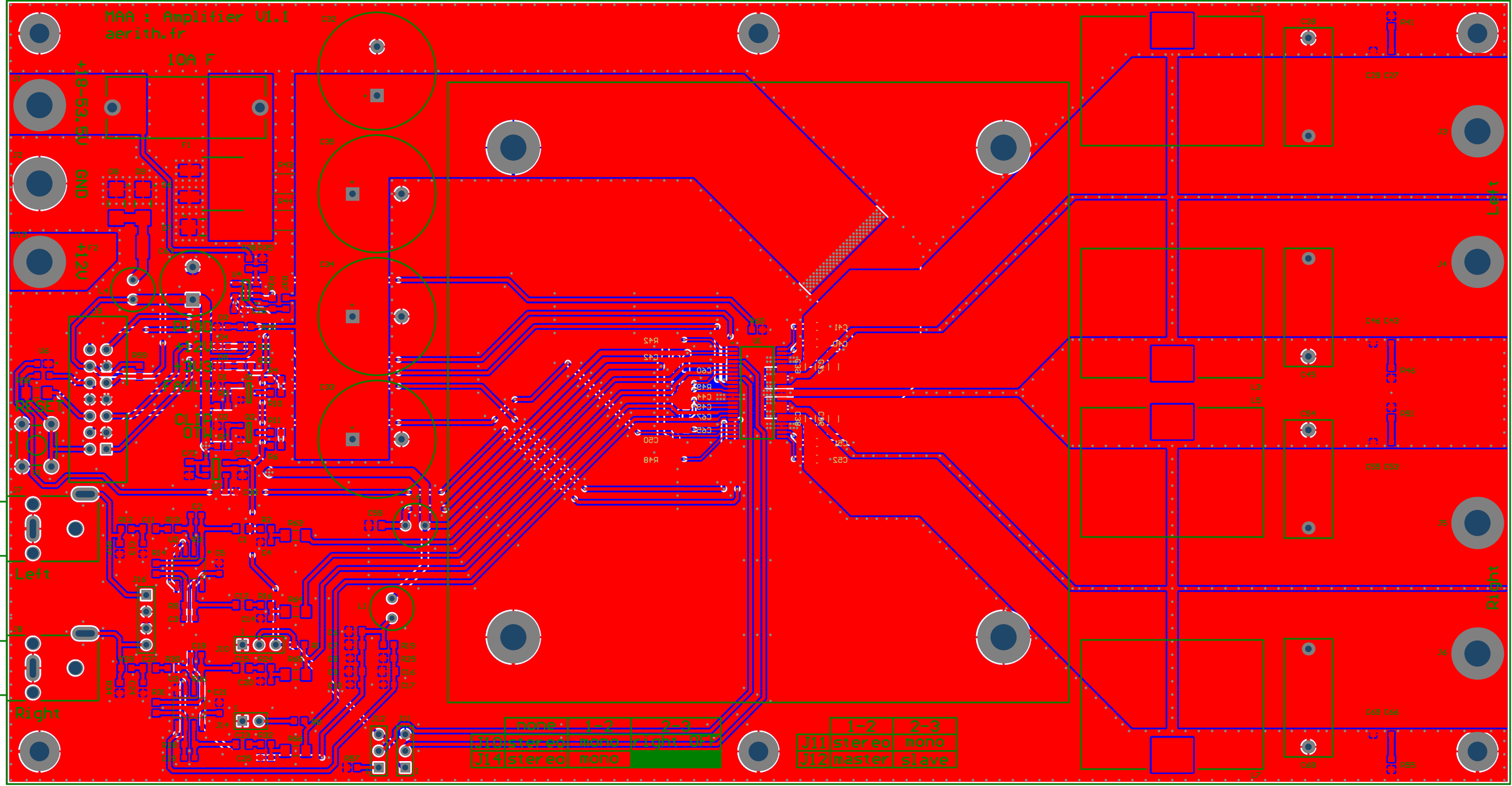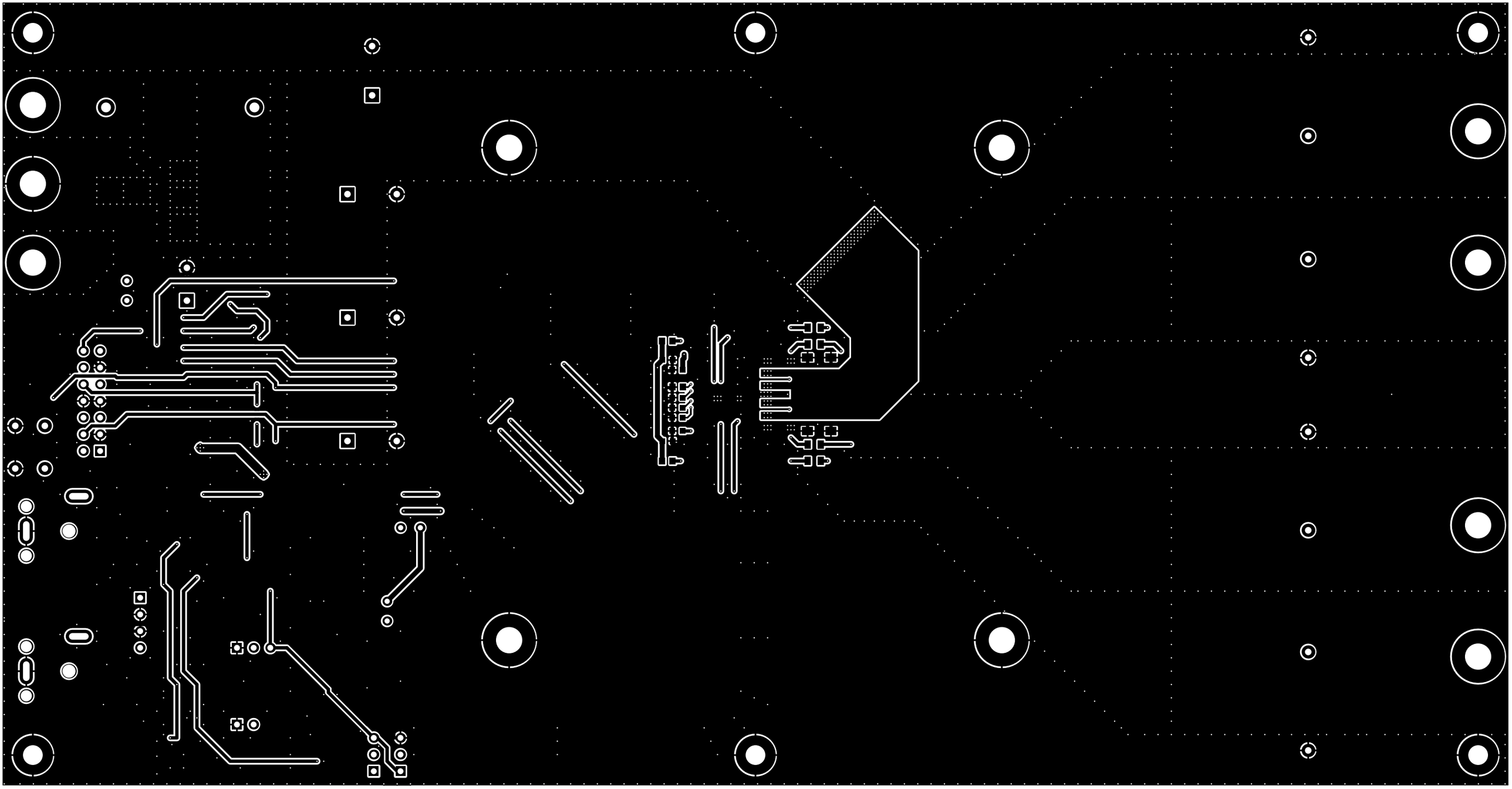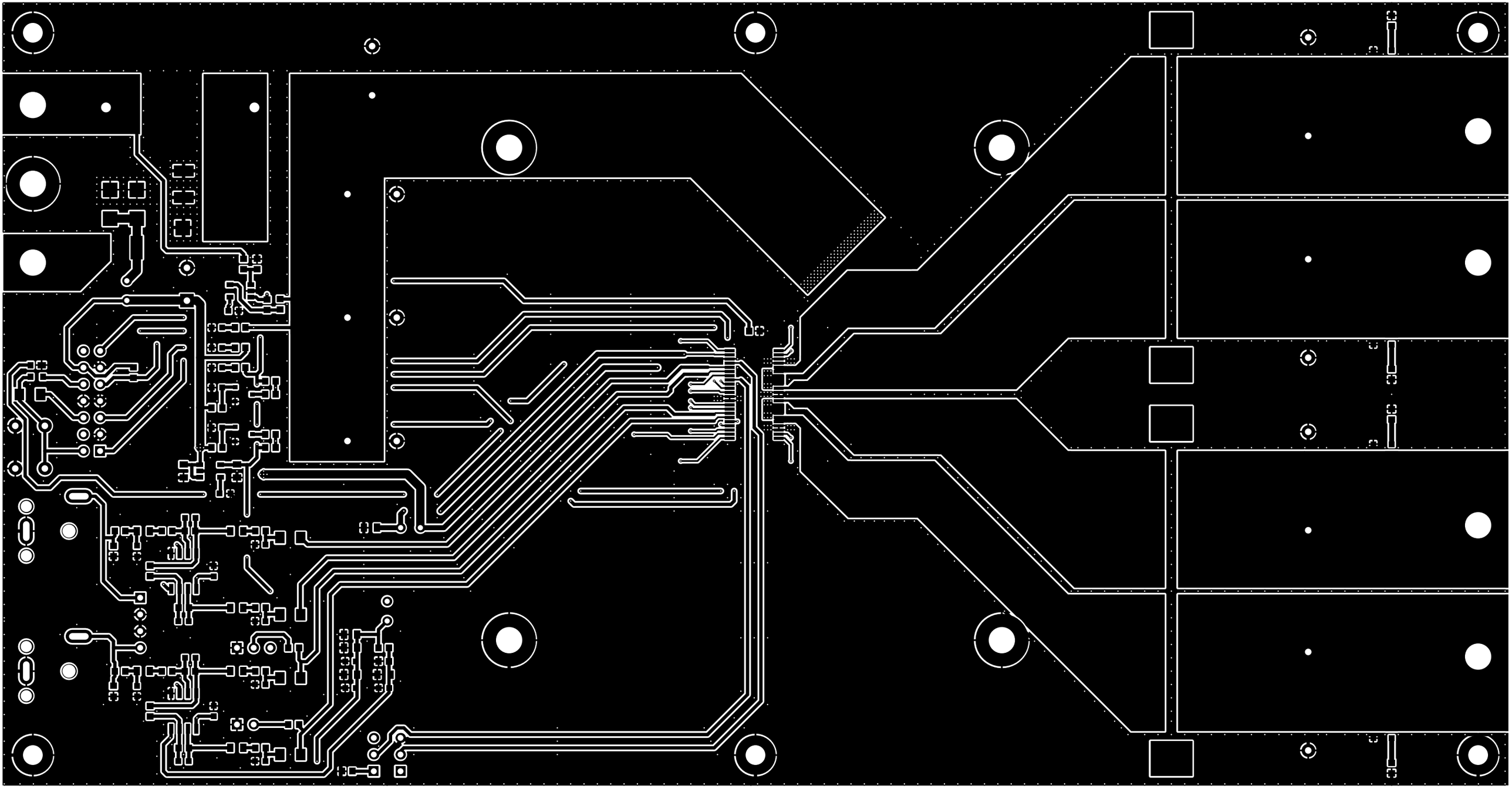
MAA : Amplifier V1.1
aerith.fr
10A F
+35-0-
GND
+12V
Left
Right
Layer 1
Layer 4
Power
Driver
Clock
OTW
J11 stereo mono
J14 stereo mono
J11 1-2 2-3
J12 master slave